SARO TECH

Innovative ideas,
inspired living

Exterior

Installation Guide:

Coextruded Beam

Tools & Materials

The diagrams and instructions described in this guide are for illustrative purposes only. They are based on our recommendations, and a professional should be consulted before installation if something different from what is shown is required, as this guide is not intended to replace professional advice.

The consumer assumes all risks and responsibilities associated with the construction and use of this product.

Material damaged during installation is not covered under the warranties of SARO TECH US and/or its subsidiaries, parent companies, related parties, and/or affiliates.

Tape Measure

Pencil

Cutting Tool

Drill

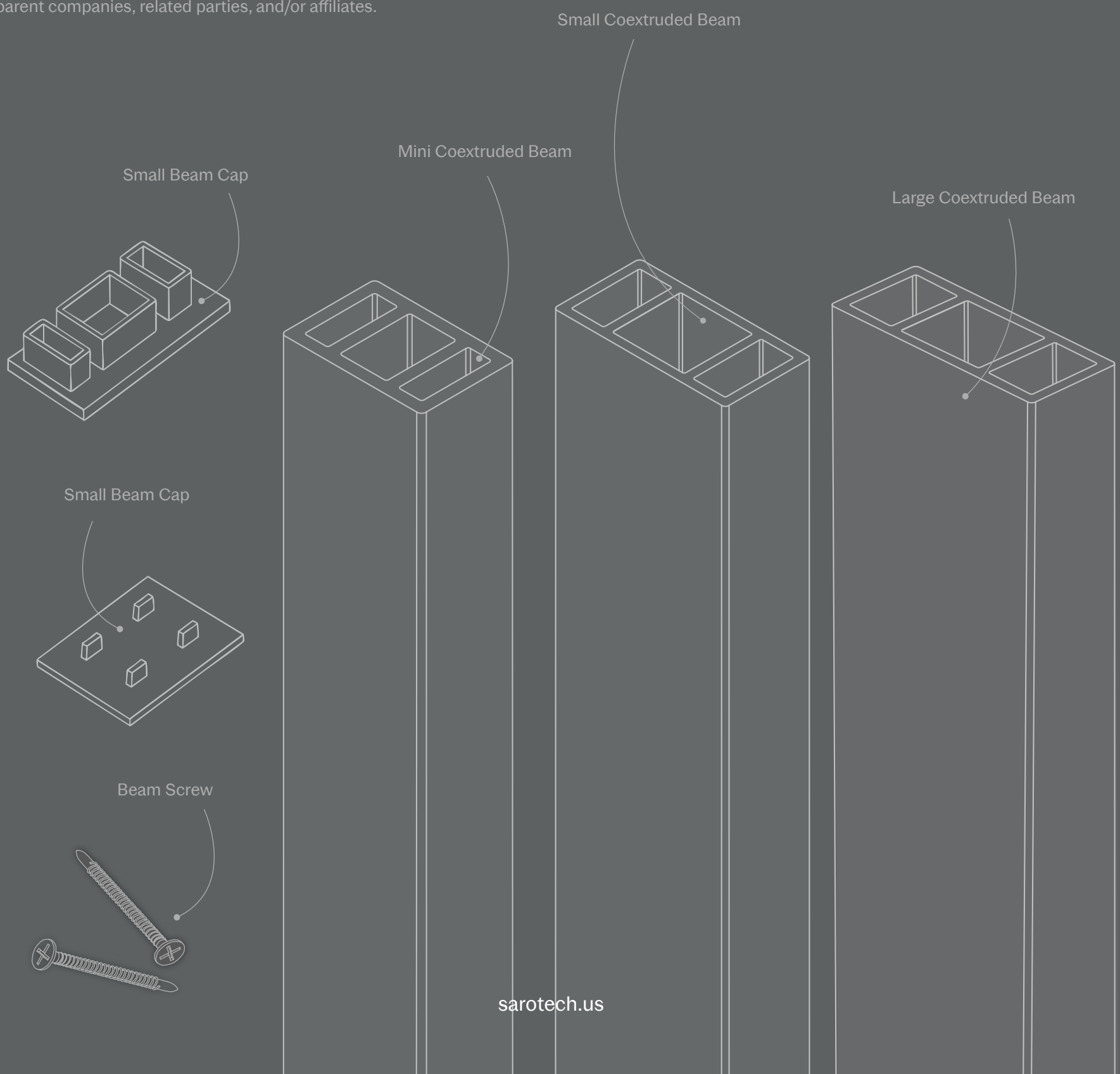

IMPORTANT

To prevent accidents during installation, it is recommended that the material be handled by two people.

This material is not designed to be used as a column or load-bearing support.

1. MEASURE THE WORK AREA

Prepare your work area and make sure it is a flat, level, stable surface free of debris that could interfere with proper installation of the material.

Tools

Measure the lengths of the space where the coextruded beam will be installed and, based on the square footage, calculate the number of pieces required to cover the area.

2. INSTALL THE FRAME

It is recommended to install a reinforcement frame on the structure, spaced no more than 3.2 feet apart, positioned perpendicular to the direction in which the beams will be installed.

It is important to ensure that the frame is level to prevent the boards from warping and to achieve a better appearance.

Tools

1

Illustration 1

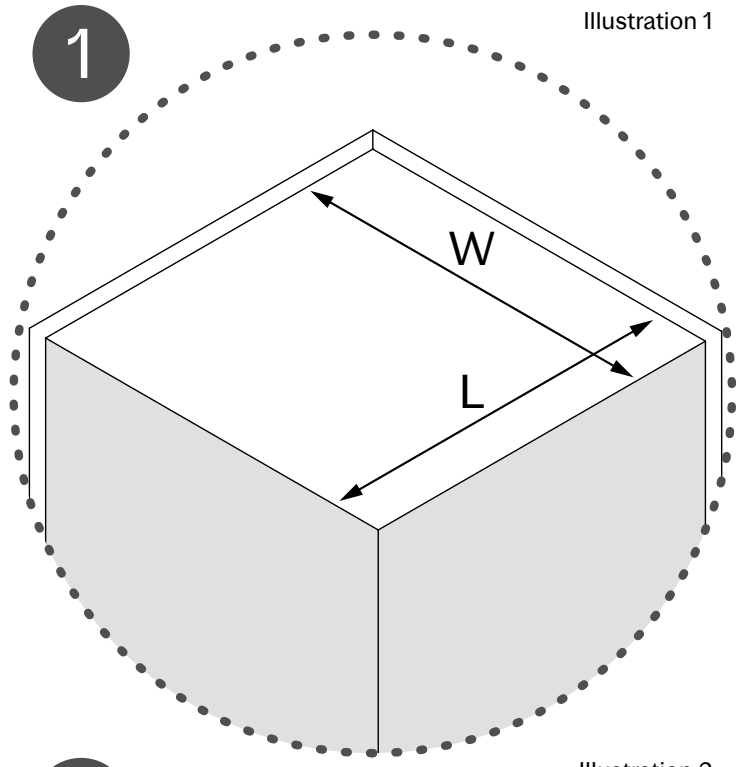

2

Illustration 2

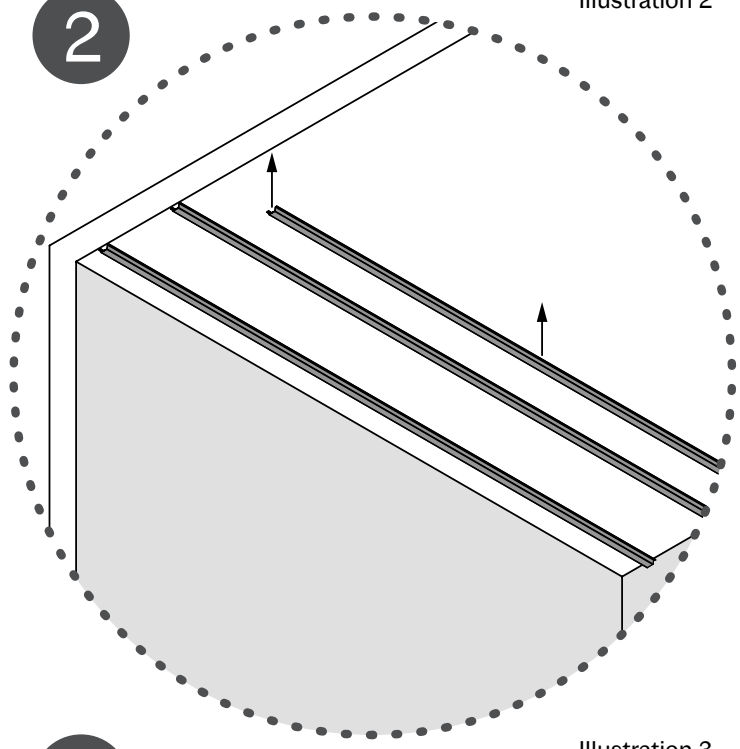

3

Illustration 3

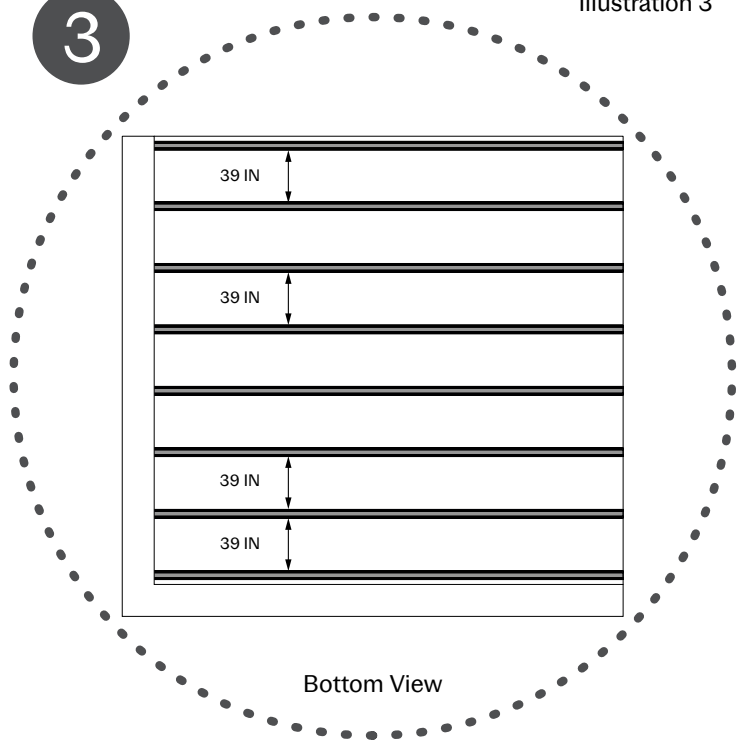

4

Illustration 4

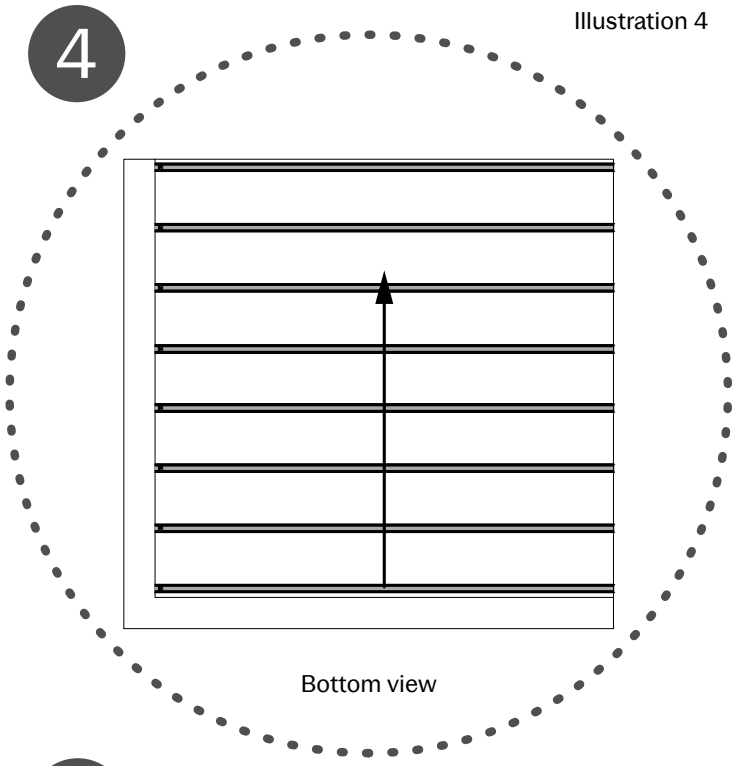

5

Illustration 5

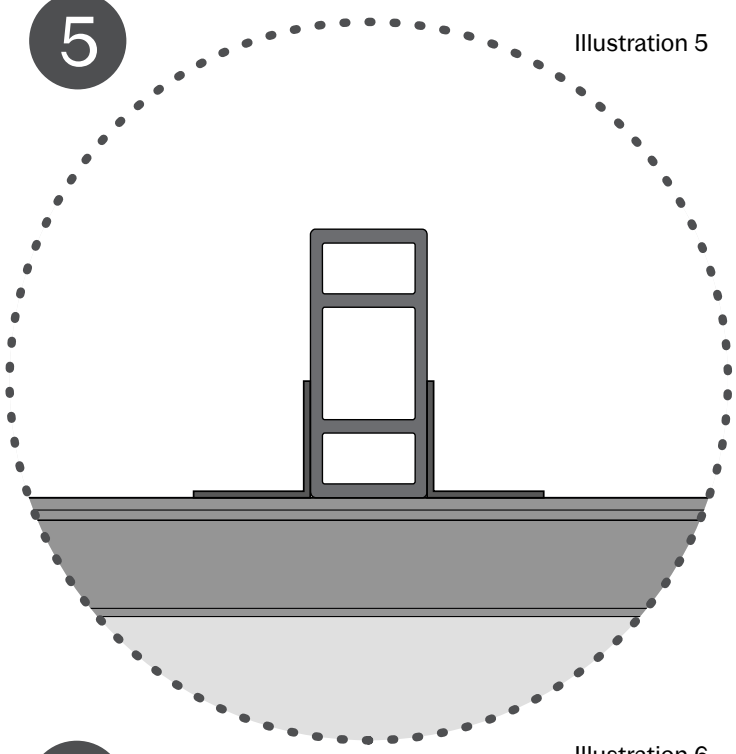

6

Illustration 6

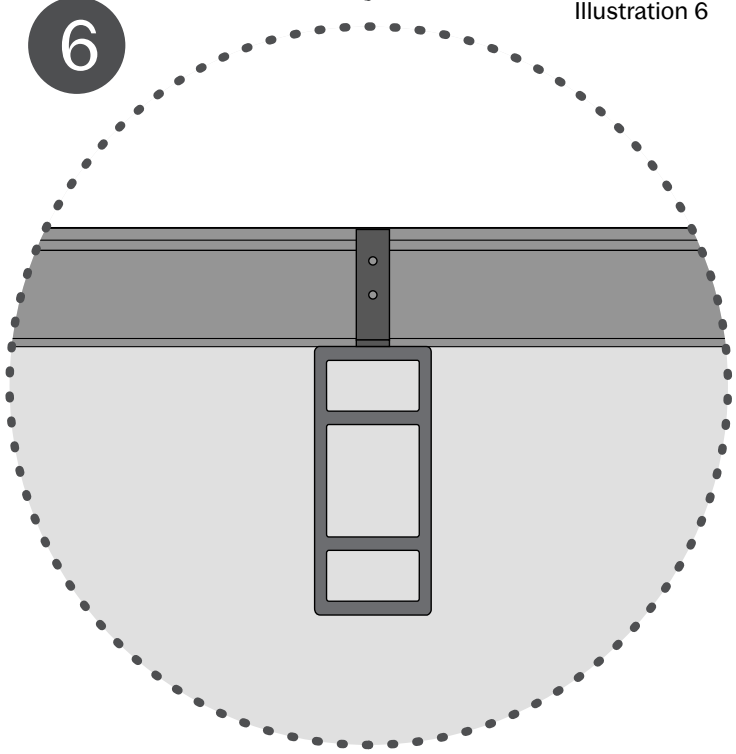

3. PLACE THE FIRST PIECE

Once the structure is ready, use 2” brackets to secure the beams. First, fasten the brackets to the frame; then position the beam as desired and secure it to the bracket, perpendicular to the frames.

Depending on the desired design, the beams and brackets may be installed above or below the frame, as shown in illustrations 5 and 6.

All screws must always be stainless steel.

Tools

4. Secure the piece to the furring channel with screws through the side flange of the piece, as shown in illustration 7.

Tools

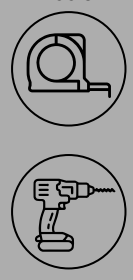

5. If the length of the beam exceeds approximately 12 inches (11.8 in), a 2 in x 1/2 in aluminum profile should be used as a support bar, installed along the length of the beam.

The support bar will also be useful for joining two beam sections together. (Illustration 8)

6. Once the first beam is installed, determine the desired spacing between each beam. We recommend 2 to 4 inches to create optimal shade for your outdoor space, then continue the installation process accordingly.

Tools

7

Illustration 7

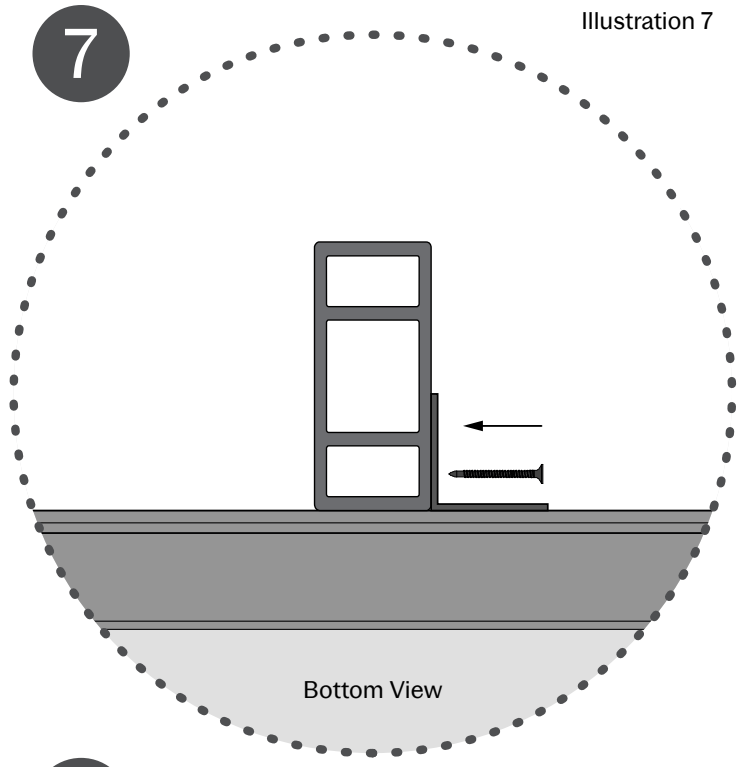

8

Illustration 8

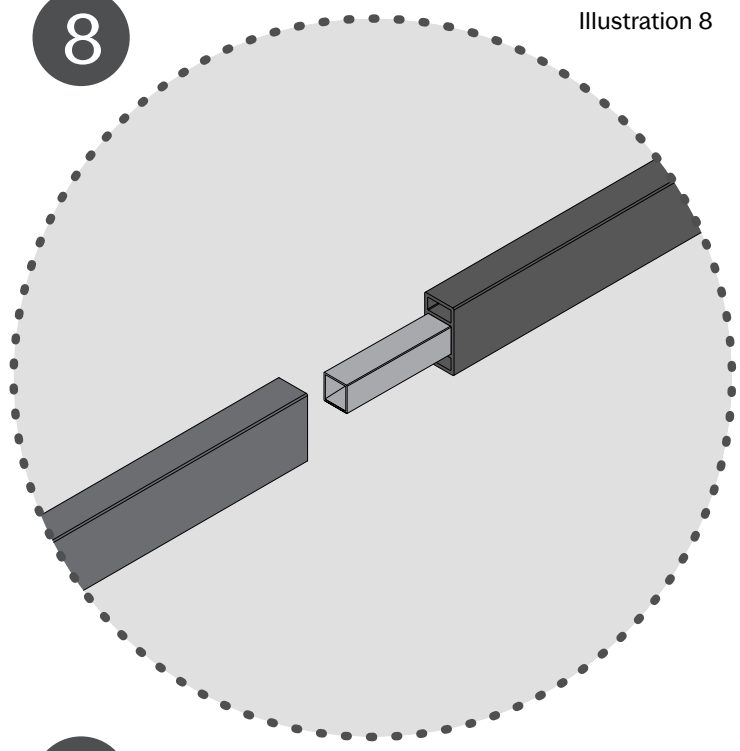

9

Illustration 9

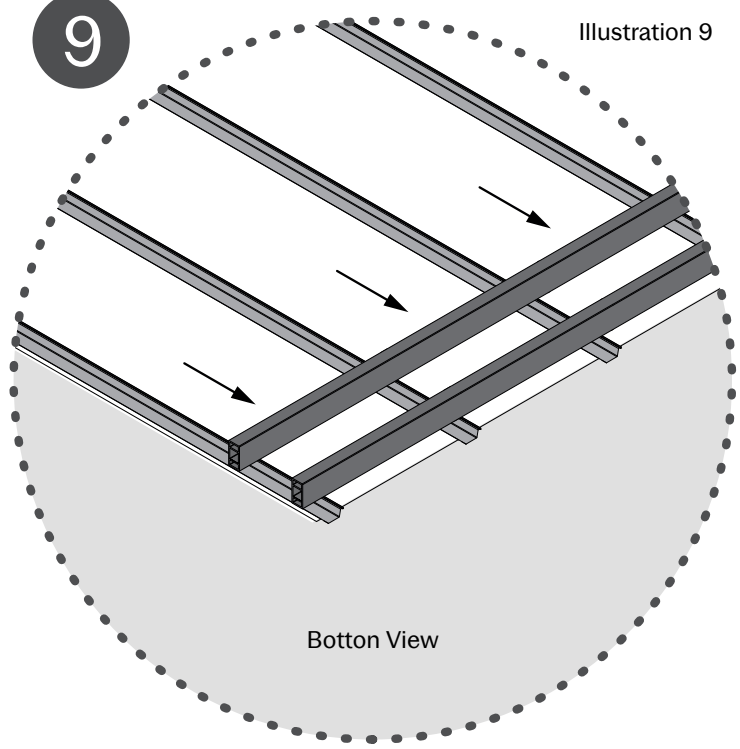

7. Repeat Steps 4, 5, and 6 to secure the remaining pieces over the areas you wish to cover.

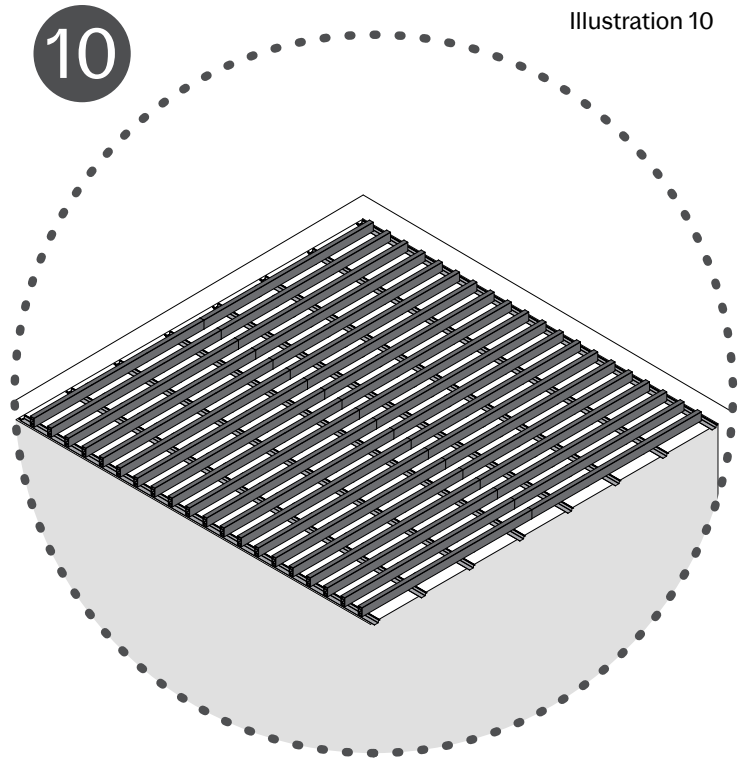

Illustration 10

SARO TECH